XLN 600

Recessed LED luminaire for installation in modular suspended ceilings. Luminaire can be also surface mounted.

Mounting:	Modular ceiling lay in type in standard or surface mounted.
Body material:	Steel and aluminium
Colour:	Standard White RAL 9016, other RAL colours on request (please add RAL colour after index number)
LED module:	Signify (Philips), Osram, Tridonic or equivalent LED module included
Colour temperature:	3000/4000K, other on request
Colour Rendering Index (CRI):	>80 in standard, >90 on request
Driver:	EVG/DALI on request
Emergency unit:	On request - Standard or DALI 3 hour emergency unit
Movement sensor:	on request
Daylight control sensor:	on request
Operating temperature range:	0°C ... +40°C
IP Class:	IP44
Power:	220-240V 50/60Hz
Lighting direction:	Direct lighting
Reflector type:	Aluminium white
Light distribution:	Symmetric
Diffuser:	OP (Opal), MP (Microprismatic), MP19 (Microprismatic with UGR<19)
General data:	5 Years standard warranty
	Different lumen output or wattage available on request
	All other technical features such as: Luminaire Efficacy, LOR, Lumen maintenance L/B etc. available in our pricelist
	Wattage of products may vary due to constant LED efficacy improvements. Luminous flux & Luminaire Power tolerance +/- 10%.
	System power consumption (LED module & driver) depends on components used
	Efficacy depends on type of LED's, electronics, optics and diffusor and may differ from shown in our data pages. Most up to date information can be found in our lighting data file database.

IP44 220-240 V 50-60 Hz 0° +40°

Drawing

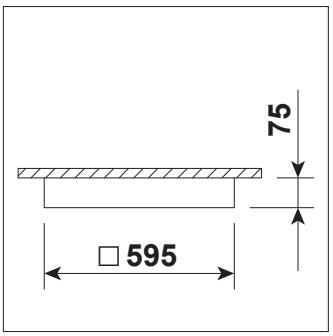

MC control

Energy saving MasterConnect wireless lighting control system with daylight and movement detection technology on request.

Zigbee Bluetooh

IMPERIAL reserves rights to introduce any construction or technical changes in the products.
Wattage of products may vary due to constant LED efficacy improvements.

Available versions

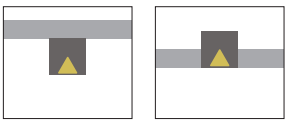

XLN 600

Product code	Product name	Gross Lumen [lm]	Nett Lumen [lm]	Power [W]	Efficacy [lm/W]	Colour temperature [K]	Length [mm]	Width [mm]	Height [mm]	Nett Weight [kg]
Universal luminaire for surface mounting or recessed for modular ceiling										
40.00150.83.E.OP	XLN 600/5000lm/830/E/OP	5000	4853	30	162	3000	595	595	75	5,5
40.00150.84.E.OP	XLN 600/5000lm/840/E/OP	5000	4853	30	162	4000	595	595	75	5,5
40.00150.83.E.MP	XLN 600/5000lm/830/E/MP	5000	4495	30	150	3000	595	595	75	5,5
40.00150.84.E.MP	XLN 600/5000lm/840/E/MP	5000	4495	30	150	4000	595	595	75	5,5
40.00150.83.E.MP19	XLN 600/5000lm/830/E/MP19	5000	4495	30	150	3000	595	595	75	5,5
40.00150.84.E.MP19	XLN 600/5000lm/840/E/MP19	5000	4495	30	150	4000	595	595	75	5,5
40.00151.83.E.OP	XLN 600/7000lm/830/E/OP	7000	6842	43	159	3000	595	595	75	5,5
40.00151.84.E.OP	XLN 600/7000lm/840/E/OP	7000	6842	43	159	4000	595	595	75	5,5
40.00151.83.E.MP	XLN 600/7000lm/830/E/MP	7000	6438	43	150	3000	595	595	75	5,5
40.00151.84.E.MP	XLN 600/7000lm/840/E/MP	7000	6438	43	150	4000	595	595	75	5,5
40.00151.83.E.MP19	XLN 600/7000lm/830/E/MP19	7000	6438	43	150	3000	595	595	75	5,5
40.00151.84.E.MP19	XLN 600/7000lm/840/E/MP19	7000	6438	43	150	4000	595	595	75	5,5

IMPERIAL reserves rights to introduce any construction or technical changes in the products.
Wattage of products may vary due to constant LED efficacy improvements.